PCs Industriais para Aplicações Embarcadas

Intel® Core™ i3 / i5 / i7 Fanless

Esta linha de PCs Industriais é composta por equipamentos fanless equipados com as versões de 9ª | 8ª e 4ª geração de processadores Intel® Core™ i3 / i5 / i7, alimentação DC (9~48V), entradas e saídas digitais isoladas e até 6 interfaces LAN incluindo versão com PoE. O acesso frontal foi projetado para prover a capacidade de troca rápida de "Hard Drive", bateria CMOS, cartões CFast card e SIM card. O produto utiliza uma tecnologia de dissipação de calor especial, um sistema antivibração, proteção de tensão, entrada de alimentação DC confiável, proteção contra alimentação reversa e componentes industriais selecionados.

Equipamentos com a 4ª geração de processadores Intel® Core™ i3 / i5 / i7 (LGA1150)

Características Básicas:

- Suporta a 4ª geração de processadores Intel® Core™ i3 / i5 / i7 (LGA1150);
- Chipset Intel® Q87;
- Até 16GB memória RAM (2x DDR3 / DDR3L SO-DIMM);
- 3x Saídas independentes de vídeo: 1x DVI-I a e 2x Display Port;
- Portas de rede Intel® GbE, que suportam Wake-on-LAN, PXE e PoE (* Ver códigos abaixo dos modelos e variações de LAN);
- 4x USB 3.0 e 4x USB 2.0;
- 6x Interfaces seriais RS232/422/485 com alimentação 5V/12V;
- 4x Entradas digitais isoladas e 4x Saídas digitais isoladas;
- 2x 2.5" SATA SSD/HDD Bay;
- 2x mSATA (1x compartilhada através de conector Mini-PCIe);
- 1x CFast Card and 1x SIM Card socket;
- Alimentação de entrada 9~48VDC, suporta modo AT/ATX;
- 2x Slots Mini-PCIe para expansão Wi-Fi / GSM / I/O;
- 1x Slot PCI ou 1x PCIe x16 para expansão;
- Power Ignition;
- Atende norma EN50155 para aplicação em transporte ferroviário.

(*) OBA-DS1001CZ – 2x LAN
(*) OBA-DS1001LCZ – 6x LAN
(*) OBA-DS1001PCZ – 2x LAN e 4x PoE

www.orionpc.com.br
55 11 4195-0992

PCs Industriais para Aplicações Embarcadas

Intel® Core™ i3 / i5 / i7 Fanless

Especificações da versão OBA-DS1001CZ

Processor System
- Support 4th Generation Intel® Core™ i3 / i5 / i7 LGA 1150 Processor, with AMI 128Mbit SPI BIOS
  - Celeron® G1820TE, Dual Core, 2.2GHz, 2M Cache
  - Core™ i3-4330TE, Dual Core, 2.4GHz, 4M Cache
  - Core™ i5-4570TE, Dual Core, 2.7GHz, 4M Cache
  - Core™ i7-4770TE, Quad Core, 2.3 GHz, 8M Cache

Chipset
- Intel® Q87 Chipset

Memory
- 2x 204-Pin DDR3 / DDR3L-1333MHz / 1600MHz SO-DIMM (un-buffered and non-ECC), Max. up to 16GB

Display
Triple Display
- 1x DVI and 2x DisplayPort
- 1x VGA (w/ DVI to VGA Adapter) and 2x DisplayPort
- 1x VGA (w/ DVI-I Split Cable), 1x DVI-D, and 1x DisplayPort

Expansion
- 1x PCIe x16 for DS-1001-E Only
  Support maximum dimension of add-on card (H x L): 111.15mm x 235mm
- 1x PCI for DS-1001-P Only
  Support maximum dimension of add-on card (H x L): 111.15mm x 235mm
- 2x Full-size Mini PCIe Socket for Wi-Fi / GSM / Expansion Module
- 2x Universal I/O Bracket

Ethernet
- 1x Intel® i217LM GbE LAN Port, Support Wake-on-LAN and PXE
- 1x Intel® 82583V GbE LAN Port, Support Wake-on-LAN and PXE

Audio
- Codec: Realtek ALC888S
- 1x Mic-in and 1x Speak-out

Watchdog Timer
- Software Programmable Supports 1~255 sec. System Reset

Storage
- 2x 2.5" SATA HDD Bay (1x External Removable, 1x Internal)
- 2x Internal mSATA Slot (1x Shared by Mini-PCIe Socket)
- 1x External CFast Socket
- 1x External SIM Card Socket

I/O Ports
- 4x USB 3.0 Port
- 4x USB 2.0 Port
- 1x 4 Isolated DI & 4 Isolated DO Port
- 6x DB9 for COM1~6, Support RS232/422/485 with Auto Flow Control
- 1x PS/2 Port
- 2x Antenna Hole
- 1x Power Switch
- 1x AT/ATX Switch
- 1x External Battery Holder
- 1x External Fan Connector
- 1x Remote Power Connector

Digital Input & Output
- 4x Digital Input (Source Type)
  - Input Voltage (Dry Contact):
    - Logic 0: Close to GND
    - Logic 1: Open
  - Input Voltage:
    - Logic 0: 3V max.
    - Logic 1: 5V min. (DI to COM-)
- 4x Digital Output
  - Supply Voltage: 5~30VDC
  - Sink Current: 200 mA Max. Per Channel

Power
- Support AT, ATX Mode
- 1x 3-pin Terminal Block Connector with Power Input 9~48VDC
- 1x Optional AC/DC 24V/5A, 120W Power Adapter

Environment
- Operating Temperature: Ambient with Air Flow: -10°C to 60°C (with Industrial Grade Peripherals)
- Storage Temperature: -20°C to 80°C
- Relative Humidity: 10%~95% (non-condensing)

Physical
- Dimension (WxDxH, mm): 227 x 261 x 106 mm
- Weight: 5.22 kg
- Construction: Extruded Aluminum with Heavy Duty Metal
- Mounting: Wall

Operating System
- Windows® 8
- Windows® 7
- Windows® Embedded 8 Standard
- Windows® Embedded Standard 7

Certification
- CE
- FCC Class A
- EN 50155
- EN 50121-3-2

PCs Industriais para Aplicações Embarcadas

Intel® Core™ i3 / i5 / i7 Fanless

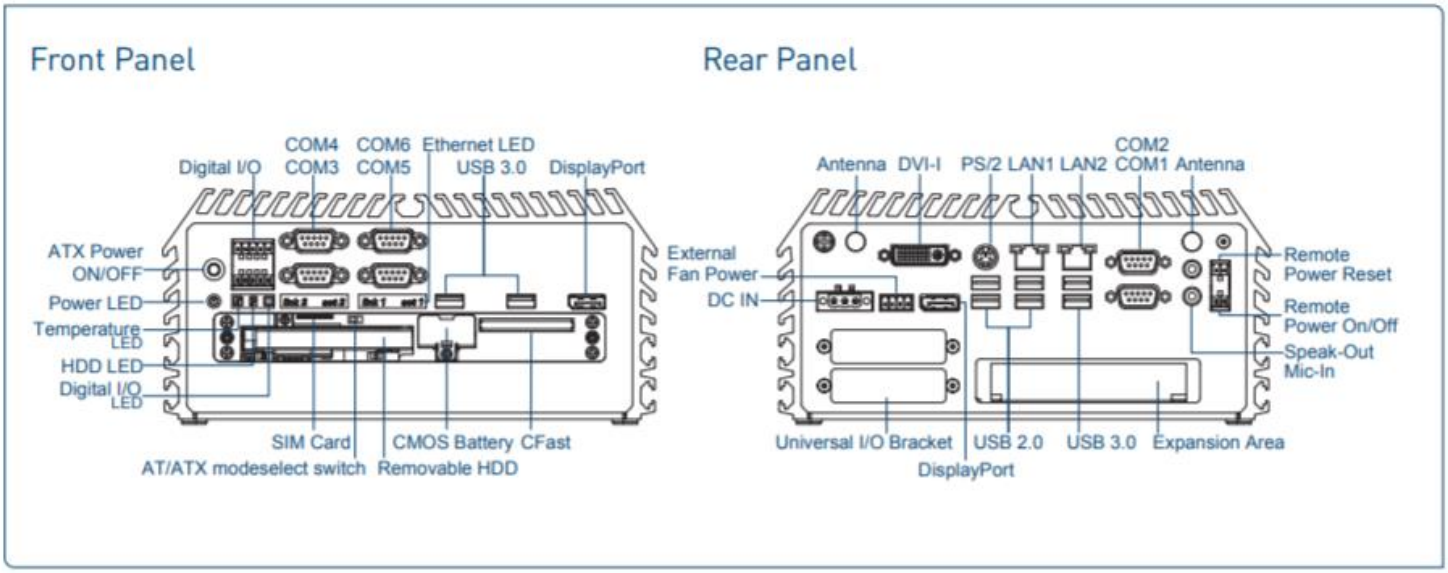

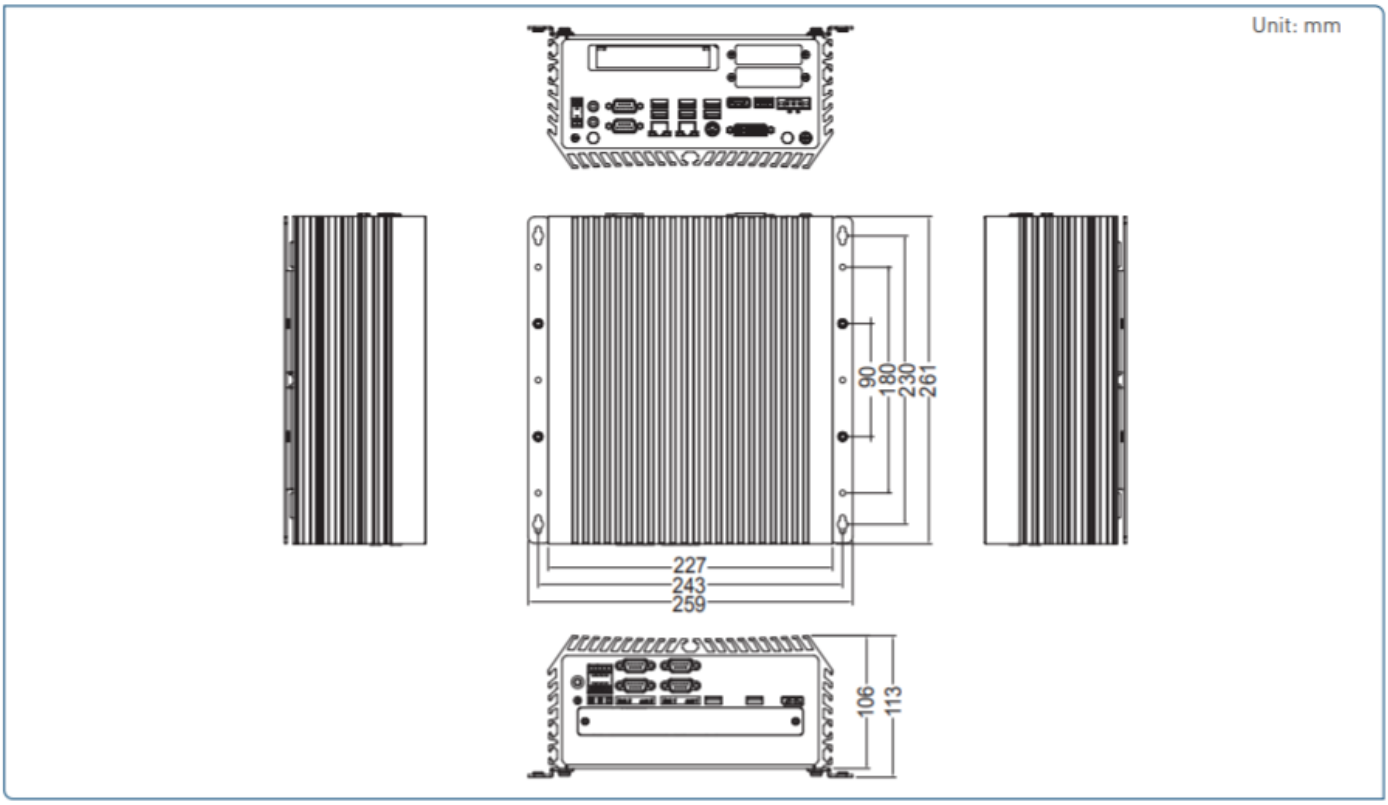

www.orionpc.com.br
55 11 4195-0992

PCs Industriais para Aplicações Embarcadas

Intel® Core™ i3 / i5 / i7 Fanless

Especificações da versão OBA-DS1001LCZ

Processor System
- Support 4th Generation Intel® Core™ i3 / i5 / i7 LGA 1150 Processor, with AMI 128Mbit SPI BIOS
  - Celeron® G1820TE, Dual Core, 2.2GHz, 2M Cache
  - Core™ i3-4330TE, Dual Core, 2.4GHz, 4M Cache
  - Core™ i5-4570TE, Dual Core, 2.7GHz, 4M Cache
  - Core™ i7-4770TE, Quad Core, 2.3 GHz, 8M Cache

Chipset
- Intel® Q87 Chipset

Memory
- 2x 204-Pin DDR3 / DDR3L-1333MHz / 1600MHz SO-DIMM (un-buffered and non-ECC), Max. up to 16GB

Display
Triple Display
- 1x DVI and 2x DisplayPort
- 1x VGA (w/ DVI to VGA Adapter) and 2x DisplayPort
- 1x VGA (w/ DVI-I Split Cable), 1x DVI-D, and 1x DisplayPort

Expansion
- 1x PCIe x16 for DS-1001L-E Only
  Support maximum dimension of add-on card (H x L): 111.15mm x 235mm
- 1x PCI for DS-1001L-P Only
  Support maximum dimension of add-on card (H x L): 111.15mm x 235mm
- 2x Full-size Mini PCIe Socket for Wi-Fi / GSM / Expansion Module
- 2x Universal I/O Bracket

Digital Input & Output
- 4x Digital Input (Source Type)
  - Input Voltage (Dry Contact):
    Logic 0: Close to GND
    Logic 1: Open
  - Input Voltage:
    Logic 0: 3V max.
    Logic 1: 5V min. (DI to COM-)
- 4x Digital Output
  - Supply Voltage: 5~30VDC
  - Sink Current: 200 mA Max. Per Channel

Power
- Support AT, ATX Mode
- 1x 3-pin Terminal Block Connector with Power Input 9~48VDC
- 1x Optional AC/DC 24V/5A, 120W Power Adapter

Ethernet
- 1x Intel® i217LM GbE LAN Port, Support Wake-on-LAN and PXE
- 5x Intel® 82583V GbE LAN Port, Support Wake-on-LAN and PXE

Audio
- Codec: Realtek ALC888S
- 1x Mic-in and 1x Speak-out

Watchdog Timer
- Software Programmable Supports 1~255 sec. System Reset

Storage
- 2x 2.5" SATA HDD Bay (1x External Removable, 1x Internal)
- 2x Internal mSATA Slot (1x Shared by Mini-PCIe Socket)
- 1x External CFast Socket
- 1x External SIM Card Socket

I/O Ports
- 4x USB 3.0 Port
- 4x USB 2.0 Port
- 1x 4 Isolated DI & 4 Isolated DO Port
- 6x DB9 for COM1~6, Support RS232/422/485 with Auto Flow Control
- 1x PS/2 Port
- 2x Antenna Hole
- 1x Power Switch
- 1x AT/ATX Switch
- 1x External Battery Holder
- 1x External Fan Connector
- 1x Remote Power Connector

Environment
- Operating Temperature: Ambient with Air Flow: -10°C to 60°C (with Industrial Grade Peripherals)
- Storage Temperature: -20°C to 80°C
- Relative Humidity: 10%~95% (non-condensing)

Physical
- Dimension (WxDxH, mm): 227 x 261 x 106 mm
- Weight: 5.22 kg
- Construction: Extruded Aluminum with Heavy Duty Metal
- Mounting: Wall

Operating System
- Windows® 8
- Windows® 7
- Windows® Embedded 8 Standard
- Windows® Embedded Standard 7

Certification
- CE
- FCC Class A
- EN 50155
- EN 50121-3-2

PCs Industriais para Aplicações Embarcadas

Intel® Core™ i3 / i5 / i7 Fanless

Front Panel

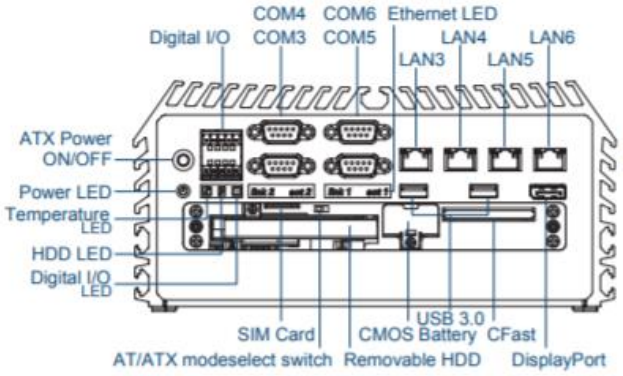

Rear Panel

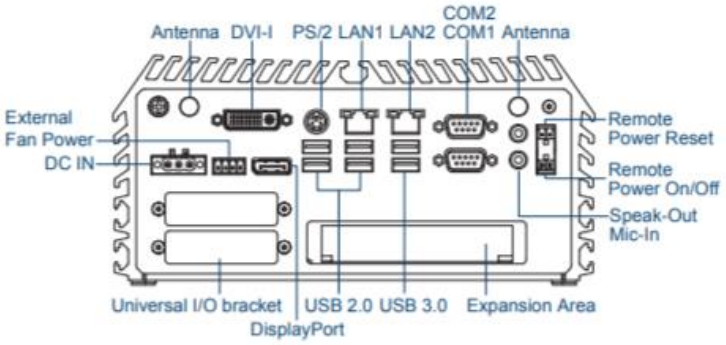

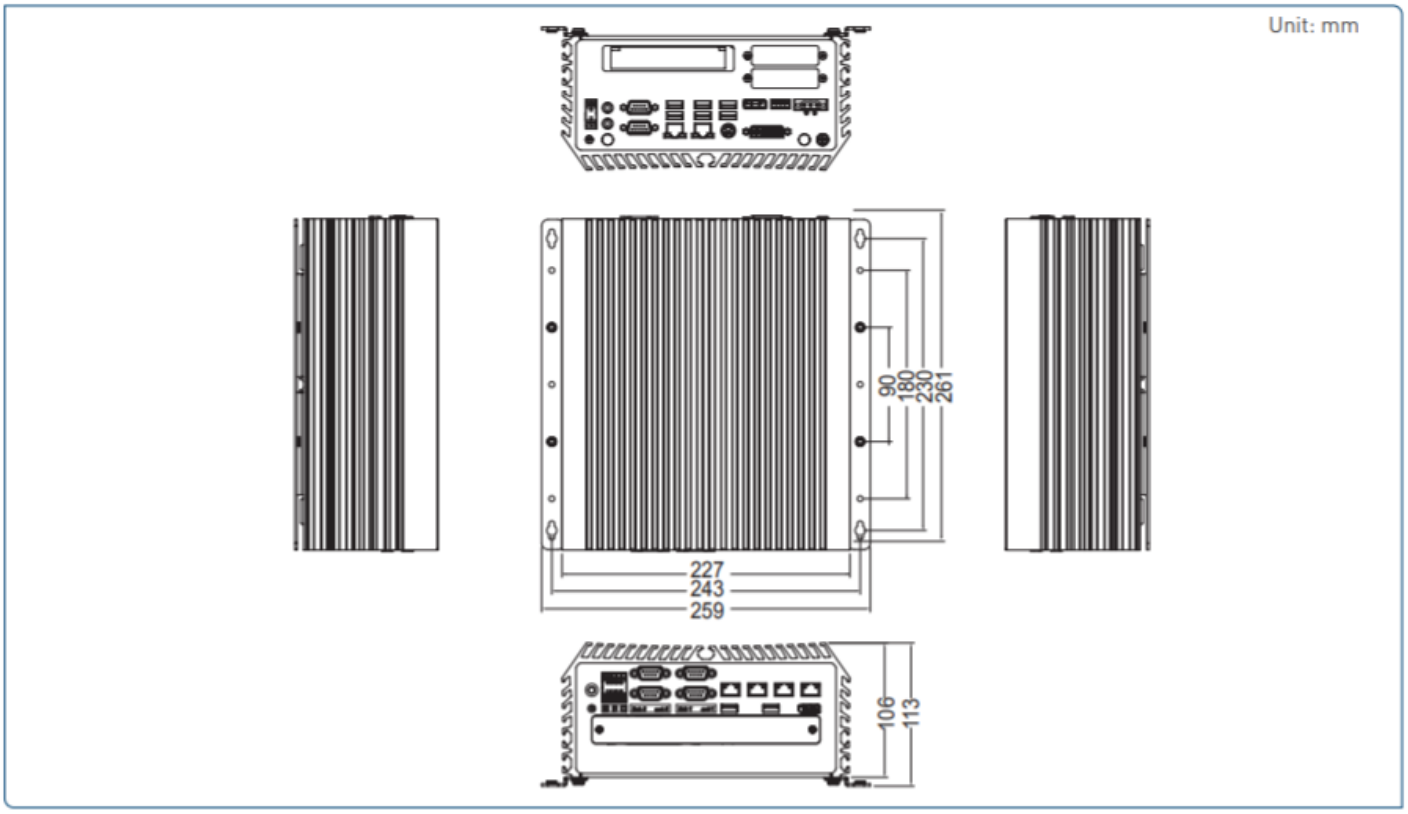

www.orionpc.com.br
55 11 4195-0992

PCs Industriais para Aplicações Embarcadas

Intel® Core™ i3 / i5 / i7 Fanless

Especificações da versão OBA-DS1001PCZ

Processor System
- Support 4th Generation Intel® Core™ i3 / i5 / i7 LGA 1150 Processor, with AMI 128Mbit SPI BIOS
  - Celeron® G1820TE, Dual Core, 2.2GHz, 2M Cache
  - Core™ i3-4330TE, Dual Core, 2.4GHz, 4M Cache
  - Core™ i5-4570TE, Dual Core, 2.7GHz, 4M Cache
  - Core™ i7-4770TE, Quad Core, 2.3 GHz, 8M Cache

Chipset
- Intel® Q87 Chipset

Memory
- 2x 204-Pin DDR3 / DDR3L-1333MHz / 1600MHz SO-DIMM (un-buffered and non-ECC), Max. up to 16GB

Display
Triple Display
- 1x DVI and 2x DisplayPort
- 1x VGA (w/ DVI to VGA Adapter) and 2x DisplayPort
- 1x VGA (w/ DVI-I Split Cable), 1x DVI-D, and 1x DisplayPort

Expansion
- 1x PCIe x16 for DS-1001P-E Only
  Support maximum dimension of add-on card (H x L): 111.15mm x 235mm
- 1x PCI for DS-1001P-P Only
  Support maximum dimension of add-on card (H x L): 111.15mm x 235mm
- 2x Full-size Mini PCIe Socket for Wi-Fi / GSM / Expansion Module
- 2x Universal I/O Bracket

Audio
- Codec: Realtek ALC888S
- 1x Mic-in and 1x Speak-out

Watchdog Timer
- Software Programmable Supports 1~255 sec. System Reset

Ethernet
- 1x Intel® i217LM GbE LAN Port, Support Wake-on-LAN and PXE
- 5x Intel® 82583V GbE LAN Port, Support Wake-on-LAN and PXE
- 4x 802.3at Compliant PoE Port, The Maximum DC Power Delivery on Each PoE is 25W@DC 56V Input

Storage
- 2x 2.5" SATA HDD Bay (1x External Removable, 1x Internal)
- 2x Internal mSATA Slot (1x Shared by Mini-PCIe Socket)
- 1x External CFast Socket
- 1x External SIM Card Socket

I/O Ports
- 4x USB 3.0 Port
- 4x USB 2.0 Port
- 1x 4 Isolated DI & 4 Isolated DO Port
- 6x DB9 for COM1~6, Support RS232/422/485 with Auto Flow Control
- 1x PS/2 Port
- 2x Antenna Hole
- 1x Power Switch
- 1x AT/ATX Switch
- 1x External Battery Holder
- 1x External Fan Connector
- 1x Remote Power Connector

Digital Input & Output
- 4x Digital Input (Source Type)
  - Input Voltage (Dry Contact):
    Logic 0: Close to GND
    Logic 1: Open
  - Input Voltage:
    Logic 0: 3V max.
    Logic 1: 5V min. (DI to COM-)
- 4x Digital Output
  - Supply Voltage: 5~30VDC
  - Sink Current: 200 mA Max. Per Channel

Power
- Support AT, ATX Mode
- 1x 3-pin Terminal Block Connector with Power Input 9~48VDC
- 1x Optional AC/DC 24V/9.2A, 220W Power Adapter

Environment
- Operating Temperature: Ambient with Air Flow: -10°C to 60°C (with Industrial Grade Peripherals)
- Storage Temperature: -20°C to 80°C
- Relative Humidity: 10%~95% (non-condensing)

Physical
- Dimension (WxDxH, mm): 227 x 261 x 106 mm
- Weight: 5.22 kg
- Construction: Extruded Aluminum with Heavy Duty Metal
- Mounting: Wall

Operating System
- Windows® 8
- Windows® 7
- Windows® Embedded 8 Standard
- Windows® Embedded Standard 7

Certification
- CE
- FCC Class A
- EN 50155
- EN 50121-3-2

www.orionpc.com.br
55 11 4195-0992

PCs Industriais para Aplicações Embarcadas

Intel® Core™ i3 / i5 / i7 Fanless

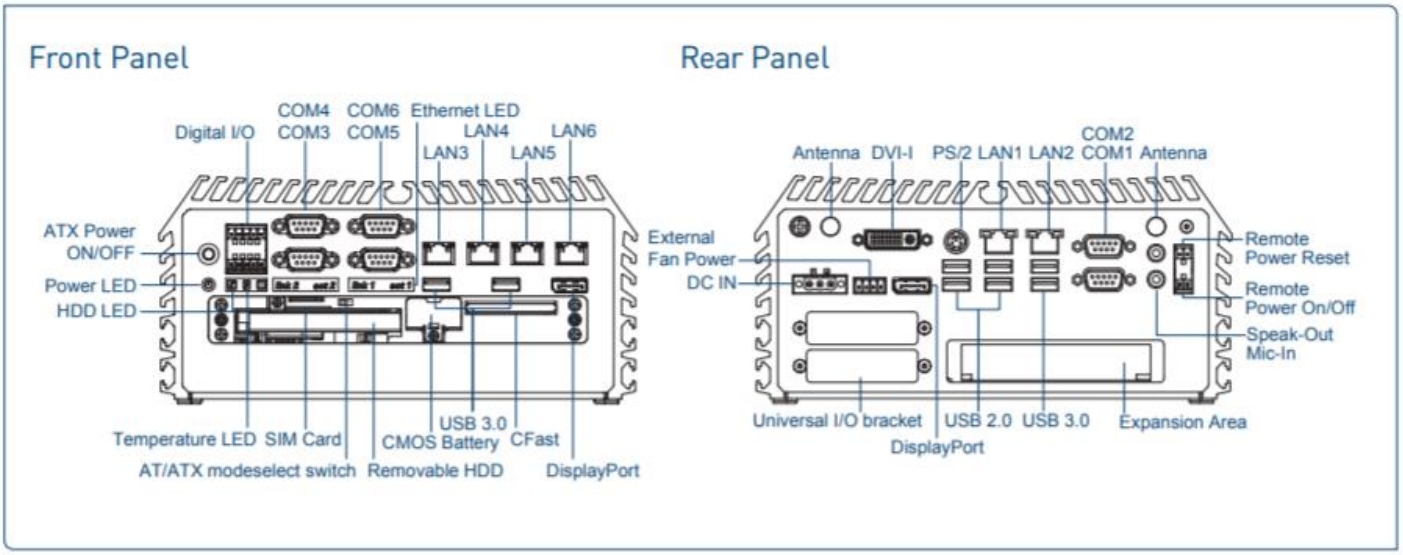

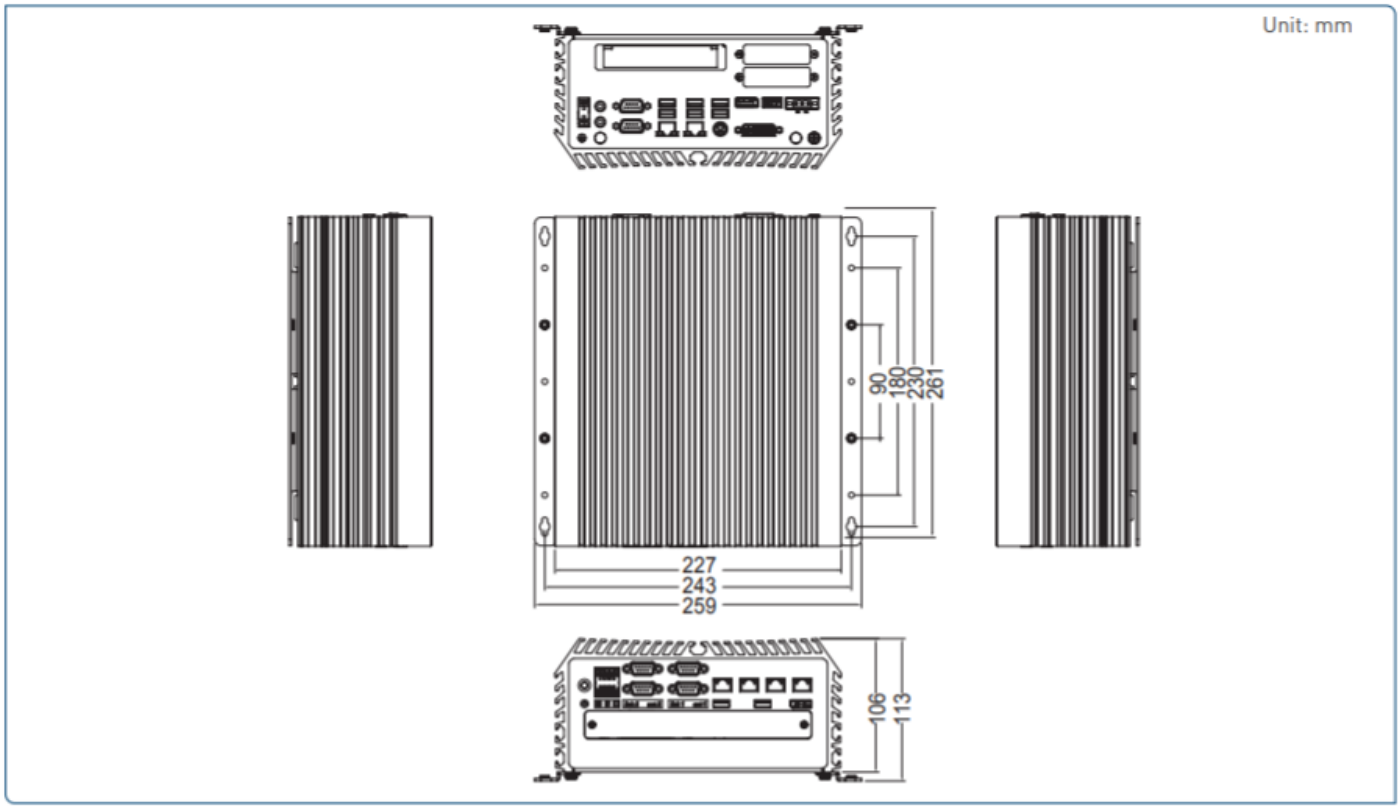

www.orionpc.com.br
55 11 4195-0992

PCs Industriais para Aplicações Embarcadas

Intel® Core™ i3 / i5 / i7 Fanless

Os PCs Industriais para aplicações embarcadas também estão disponíveis com a linha de alta performance de processadores Intel® Core™ 8ª e 9º geração, octa core e com expansão de memória até 64GB. Os produtos também incorporam alta disponibilidade de expansão de I/Os, tais como 2x Intel® GbE ports, 2x USB 3.1 (Gen2), 4x USB 3.0, 1x DVI-I, 2x DisplayPort, e 1x M.2 Key M 2280 socket para transferência de dados ultra rápida e dois slots PCIe. O Projeto destes PCs Industriais permite sua operação quando submetido a condições rigorosas ambientais, incluindo uma alta faixa de temperatura de operação: -40°C a 70°C, atendendo normas EN50155 (EN50121-3-2) e EN60950-1 e alto range de alimentação de entrada: 9VDC a 48VDC.

Equipamentos com a 9ª | 8ª geração de processadores Intel®

Características Básicas:

- Suporta a 8ª e 9ª geração de processadores Intel® Core™ / Pentium® / Celeron® Octa Cores 35W/65W LGA 1151;
- Chipset Intel® Q370;
- Até 64GB memória RAM (2x DDR4 SO-DIMM);
- 3x Saídas independentes de vídeo: 1x DVI-I e 2x Display Port;
- 2x Portas seriais RS-232/422/485 com Auto Flow;
- 3x Slots Mini-PCIe full size;
- 2x Interfaces de rede GbE LAN (Supports WoL, Teaming, Jumbo Frame & PXE);
- 1x Slot M.2 2280 M Key Socket, Auto-detection for PCIex4 NVMe SSD ou SATA Gen3 SSD;
- 2x SIM Card acessíveis pelo frontal;
- 4x CMI Slots for Modular I/O Expansion;
-1x Slot CFM para função “Power Ignition”;
- Possibilidade de até 2x slots PCI/PCIe;
- Alta faixa de temperatura de operação: -40°C a 70°C;
- Alimentação de entrada 9~48VDC, suporta modo AT/ATX;
- Atende norma EN50155 para aplicação em transporte ferroviário.

(*) OBA-DS1200CZ
(*) OBA-DS1201CZ
(*) OBA-DS1202CZ

High Performance

Fully Modular and Expandable

Wide Temperature

www.orionpc.com.br
55 11 4195-0992

PCs Industriais para Aplicações Embarcadas

Intel® Core™ i3 / i5 / i7 Fanless

Especificações da versão OBA-DS1200CZ

Processor
- 9th Generation Intel® Coffee Lake-R S Series CPU:
  - Intel® Core™ i7-9700E 8 Cores Up to 4.4 GHz, TDP 65W
  - Intel® Core™ i5-9500E 6 Cores Up to 4.2 GHz, TDP 65W
  - Intel® Core™ i3-9100E 4 Cores Up to 3.7 GHz, TDP 65W
  - Intel® Core™ i7-9700TE 8 Cores Up to 3.8 GHz, TDP 35W
  - Intel® Core™ i5-9500TE 6 Cores Up to 3.6 GHz, TDP 35W
  - Intel® Core™ i3-9100TE 4 Cores Up to 3.2 GHz, TDP 35W
- 8th Generation Intel® Coffee Lake S Series CPU:
  - Intel® Core™ i7-8700 6 Cores Up to 4.6 GHz - 12M Cache, TDP 65W
  - Intel® Core™ i5-8500 6 Cores Up to 4.1 GHz - 9M Cache, TDP 65W
  - Intel® Core™ i3-8100 4 Cores 3.6 GHz - 6M Cache, TDP 65W
  - Intel® Core™ i7-8700T 6 Cores Up to 4.0 GHz - 12M Cache, TDP 35W
  - Intel® Core™ i5-8500T 6 Cores Up to 3.5 GHz - 9M Cache, TDP 35W
  - Intel® Core™ i3-8100T 4 Cores 3.1 GHz - 6M Cache, TDP 35W
  - Intel® Pentium® G5400 2 Cores 3.7 GHz - 4M Cache, TDP 58W
  - Intel® Pentium® G5400T 2 Cores 3.1 GHz - 4M Cache, TDP 35W
  - Intel® Celeron® G4900 2 Cores 3.1 GHz - 2M Cache, TDP 54W
  - Intel® Celeron® G4900T 2 Cores 2.9 GHz - 2M Cache, TDP 35W

BIOS
- AMI 32MB SPI BIOS

Chipset
- Intel® Q370

Memory
- 2x DDR4-2400/2666 MHz SO-DIMM Sockets, Supports up to 64 GB (Un-buffered and Non-ECC Type)

Graphics
- Integrated Intel® UHD Graphics 630: Core™ i7/i5/i3
- Integrated Intel® UHD Graphics 610: Pentium® /Celeron®
- Supports Triple Independent Display (1x DVI-I, 2x DisplayPort)

Audio
- Realtek® ALC888
- High Definition Audio

Storage
- 2x 2.5" SATA HDD/SSD bay (Gen3), 1x Internal, 1x Front Accessable Supports RAID 0/1
- 3x mSATA (shared by Mini-PCIe socket) (Gen3), BIOS Selectable
- 1x M.2 Key M 2280 Socket, Supports PCIe x4 NVMe SSD or SATA SSD (Gen3)

Expansion
- 3x Full-size Mini-PCIe Socket
- 2x SIM Socket
- 1x CFM (Control Function Module) Interface
- 2x CMI (Combined Multiple I/O) High Speed Interface
- 2x CMI (Combined Multiple I/O) Low Speed Interface
- 2x Antenna Hole

Other Functions
- Supports Instant Reboot Technology (0.2 sec)
- SuperCap Integrated for CMOS Battery Maintenance-free Operation
- Watchdog Timer: Software Programmable Supports 256 Levels System Reset

Power Requirement
- Supports AT/ATX Power Type
- Power Input Voltage 9~48VDC
- 1x 3-Pin Terminal Block
- Power Adapter AC/DC 24V/5A 120W or 24V/9.2A 220W (Optional)

Physical
- Dimensions (WxDxH): 227 x 261 x 88 mm
- Weight: 4.3 kg
- Construction: Extruded Aluminum with Heavy Duty Metal
- Mounting: Wall Mount
- Unibody Chassis
- Fanless Design
- Jumper-less Design

Protection
- Reverse Power Input Protection
- Over Voltage Protection: Protection Range: 51~58V Protection Type: shut down operating voltage, re-power on at the preset level to recover
- Over Current Protection: 15A
- ESD Protection: +/-8kV (air), +/-4kV (contact)
- Surge Protection: 3.84 kV (impedance 12 ohm 1.2/50us waveform)

Certification
- EMC: CE, FCC Class A
- Safety: LVD, EN60950-1
- Railway: EN50155, EN50121-3-2

www.orionpc.com.br
55 11 4195-0992

PCs Industriais para Aplicações Embarcadas

Intel® Core™ i3 / i5 / i7 Fanless

External I/O Interface

- 1x DVI-I (DVI-D: 1920 x 1200 @60Hz / VGA: 1920 x 1080 @60Hz)
- 2x DisplayPort (DisplayPort: 4096 x 2304 @60Hz)
- 2x GbE LAN (Supports WoL, Teaming, Jumbo Frame & PXE), RJ45
  - GbE1: Intel® I210-IT
  - GbE2: Intel® I219-LM
- 2x USB 3.1 Gen2 (Type A)
- 4x USB 3.0 (Type A)
- 2x USB 2.0 (Type A)
- 2x RS-232/422/485 with Auto Flow Control (Supports 5V/12V), DB9
- 1x PS/2, 6-pin mini-DIN Female Connector
- 1x Line-out & 1x Mic-in, Phone Jack 3.5mm
- 1x ATX Power On/Off Button
- 1x AT/ATX Mode Switch
- 1x Clear CMOS Switch
- 1x Remote Reset Connector, 2-pin Terminal Block
- 1x Remote Power On/Off Connector, 2-pin Terminal Block
- 1x External Fan Connector, 4-Pin Terminal Block (Supports smart fan function)

Operating System

- Windows® 10
- Linux: Supports by project

Environment

- Operating Temperature:
  35W TDP Processor: -40°C to 70°C
  51–65W TDP Processor: -40°C to 45°C
  * PassMark BurnInTest: 100% CPU, 2D/3D Graphics (without thermal throttling)
  * With extended temperature peripherals; Ambient with air flow
  * According to IEC60068-2-1, IEC60068-2-2, IEC60068-2-14
- Storage Temperature: -40°C to 85°C
- Relative Humidity: 95%RH @ 70°C (non-Condensing)
- Shock: Operating, 50 Grms, Half-sine 11 ms Duration
  * w/ SSD, according to IEC60068-2-27
- Vibration: Operating, 5 Grms, 5-500 Hz, 3 Axes
  * w/ SSD, according to IEC60068-2-64
- MTBF: 396,565 Hours

Front I/O

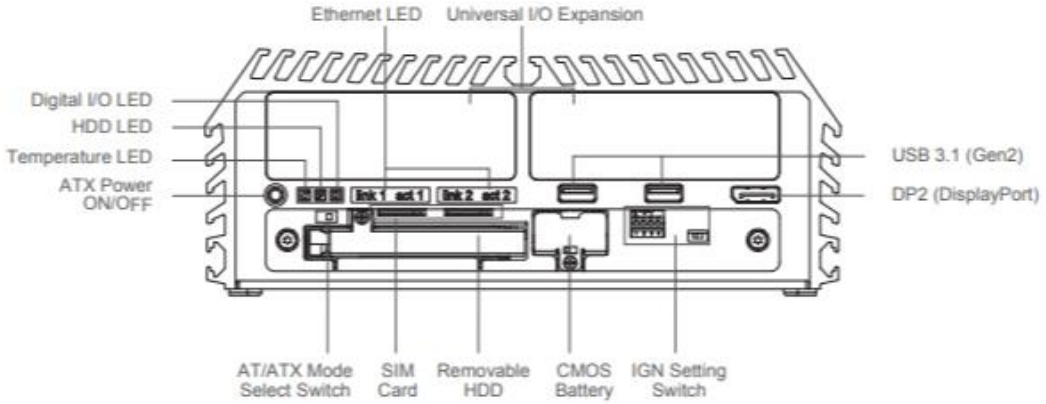

Rear I/O

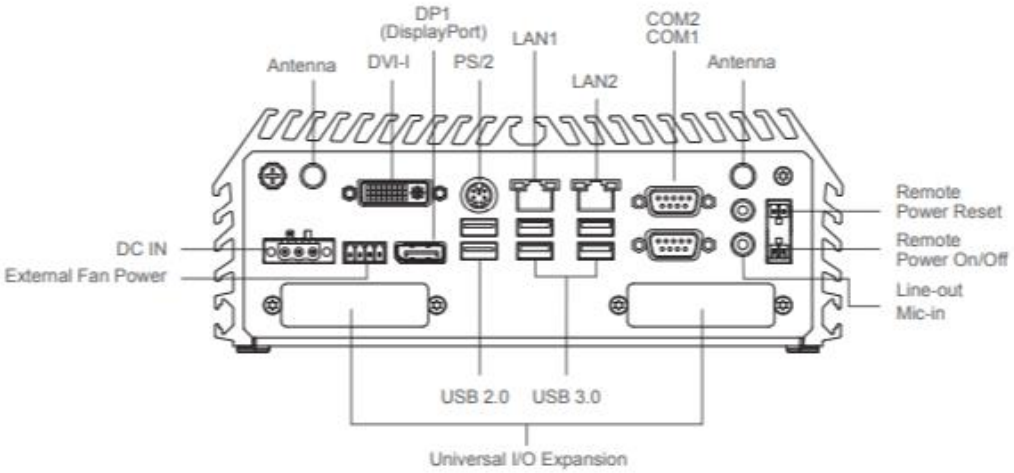

www.orionpc.com.br
55 11 4195-0992

PCs Industriais para Aplicações Embarcadas

Intel® Core™ i3 / i5 / i7 Fanless

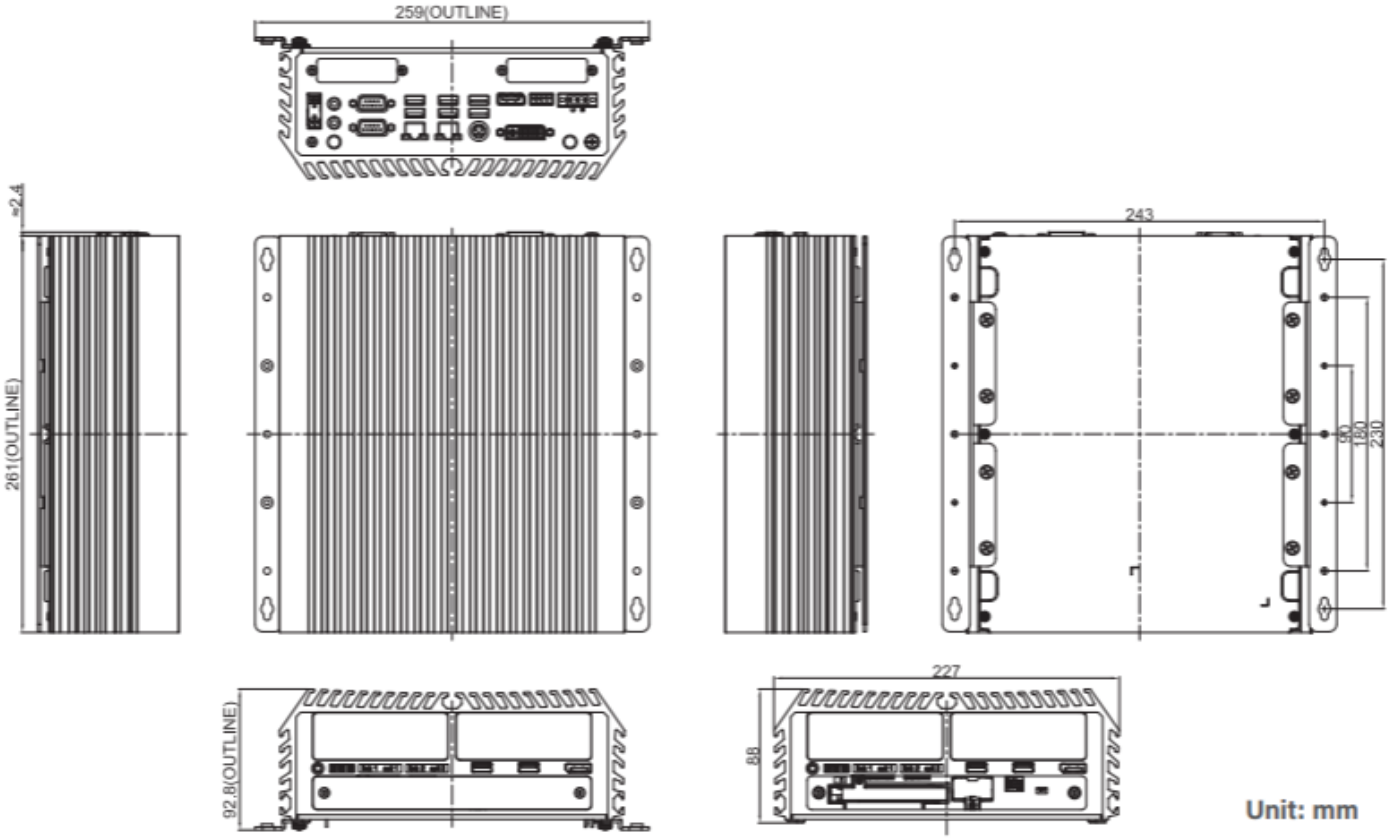

Unit: mm

www.orionpc.com.br
55 11 4195-0992

PCs Industriais para Aplicações Embarcadas

Intel® Core™ i3 / i5 / i7 Fanless

Especificações da versão OBA-DS1201CZ

Processor
- 9th Generation Intel® Coffee Lake-R S Series CPU:
  - Intel® Core™ i7-9700E 8 Cores Up to 4.4 GHz, TDP 65W
  - Intel® Core™ i5-9500E 6 Cores Up to 4.2 GHz, TDP 65W
  - Intel® Core™ i3-9100E 4 Cores Up to 3.7 GHz, TDP 65W
  - Intel® Core™ i7-9700TE 8 Cores Up to 3.8 GHz, TDP 35W
  - Intel® Core™ i5-9500TE 6 Cores Up to 3.6 GHz, TDP 35W
  - Intel® Core™ i3-9100TE 4 Cores Up to 3.2 GHz, TDP 35W
- 8th Generation Intel® Coffee Lake S Series CPU:
  - Intel® Core™ i7-8700 6 Cores Up to 4.6 GHz - 12M Cache, TDP 65W
  - Intel® Core™ i5-8500 6 Cores Up to 4.1 GHz - 9M Cache, TDP 65W
  - Intel® Core™ i3-8100 4 Cores 3.6 GHz - 6M Cache, TDP 65W
  - Intel® Core™ i7-8700T 6 Cores Up to 4.0 GHz - 12M Cache, TDP 35W
  - Intel® Core™ i5-8500T 6 Cores Up to 3.5 GHz - 9M Cache, TDP 35W
  - Intel® Core™ i3-8100T 4 Cores 3.1 GHz - 6M Cache, TDP 35W
  - Intel® Pentium® G5400 2 Cores 3.7 GHz - 4M Cache, TDP 58W
  - Intel® Pentium® G5400T 2 Cores 3.1 GHz - 4M Cache, TDP 35W
  - Intel® Celeron® G4900 2 Cores 3.1 GHz - 2M Cache, TDP 54W
  - Intel® Celeron® G4900T 2 Cores 2.9 GHz - 2M Cache, TDP 35W

BIOS
- AMI 32MB SPI BIOS

Chipset
- Intel® Q370

Memory
- 2x DDR4-2400/2666 MHz SO-DIMM Sockets, Supports up to 64 GB (Un-buffered and Non-ECC Type)

Graphics
- Integrated Intel® UHD Graphics 630: Core™ i7/i5/i3
- Integrated Intel® UHD Graphics 610: Pentium® /Celeron®
- Supports Triple Independent Display (1x DVI-I, 2x DisplayPort)

Audio
- Realtek® ALC888
- High Definition Audio

Storage
- 2x 2.5" SATA HDD/SSD bay (Gen3), 1x Internal, 1x Front Accessable Supports RAID 0/1
- 3x mSATA (shared by Mini-PCIe socket) (Gen3), BIOS Selectable
- 1x M.2 Key M 2280 Socket, Supports PCIe x4 NVMe SSD or SATA SSD (Gen3)

Expansion
- 3x Full-size Mini-PCIe Socket
- 2x SIM Socket
- 1x CFM (Control Function Module) Interface
- 2x CMI (Combined Multiple I/O) High Speed Interface
- 2x CMI (Combined Multiple I/O) Low Speed Interface
- 2x Antenna Hole
- 1x PCI/PCIe Expansion slot (with Optional Riser Card)
  * Supports maximum dimensions of add-on card (H x L):111.15 x 235 mm

Other Functions
- Supports Instant Reboot Technology (0.2 sec)
- SuperCap Integrated for CMOS Battery Maintenance-free Operation
- Watchdog Timer: Software Programmable Supports 256 Levels System Reset

Power Requirement
- Supports AT/ATX Power Type
- Power Input Voltage 9~48VDC
- 1x 3-Pin Terminal Block
- Power Adapter AC/DC 24V/5A 120W or 24V/9.2A 220W (Optional)

Physical
- Dimensions (WxDxH): 227 x 261 x 108 mm
- Weight: 4.92 kg
- Construction: Extruded Aluminum with Heavy Duty Metal
- Mounting: Wall Mount
- Unibody Chassis
- Fanless Design
- Jumper-less Design

Protection
- Reverse Power Input Protection
- Over Voltage Protection: Protection Range: 51~58V Protection Type: shut down operating voltage, re-power on at the preset level to recover
- Over Current Protection: 15A
- ESD Protection: +/-8kV (air), +/-4kV (contact)
- Surge Protection: 3.84 kV (impedance 12 ohm 1.2/50us waveform)

Certification
- EMC: CE, FCC Class A
- Safety: LVD, EN60950-1
- Railway: EN50155, EN50121-3-2

www.orionpc.com.br
55 11 4195-0992

PCs Industriais para Aplicações Embarcadas

Intel® Core™ i3 / i5 / i7 Fanless

External I/O Interface

- 1x DVI-I (DVI-D: 1920 x 1200 @60Hz / VGA: 1920 x 1080 @60Hz)
- 2x DisplayPort (DisplayPort: 4096 x 2304 @60Hz)
- 2x GbE LAN (Supports WoL, Teaming, Jumbo Frame & PXE), RJ45
  - GbE1: Intel® I210-IT
  - GbE2: Intel® I219-LM
- 2x USB 3.1 Gen2 (Type A)
- 4x USB 3.0 (Type A)
- 2x USB 2.0 (Type A)
- 2x RS-232/422/485 with Auto Flow Control (Supports 5V/12V), DB9
- 1x PS/2, 6-pin mini-DIN Female Connector
- 1x Line-out & 1x Mic-in, Phone Jack 3.5mm
- 1x ATX Power On/Off Button
- 1x AT/ATX Mode Switch
- 1x Clear CMOS Switch
- 1x Remote Reset Connector, 2-pin Terminal Block
- 1x Remote Power On/Off Connector, 2-pin Terminal Block
- 1x External Fan Connector, 4-Pin Terminal Block (Supports smart fan function)

Operating System

- Windows® 10
- Linux: Supports by project

Environment

- Operating Temperature:
  35W TDP Processor: -40°C to 70°C
  51~65W TDP Processor: -40°C to 45°C
  * PassMark BurnInTest: 100% CPU, 2D/3D Graphics (without thermal throttling)
  * With extended temperature peripherals; Ambient with air flow
  * According to IEC60068-2-1, IEC60068-2-2, IEC60068-2-14
- Storage Temperature: -40°C to 85°C
- Relative Humidity: 95%RH @ 70°C (non-Condensing)
- Shock: Operating, 50 Grms, Half-sine 11 ms Duration
  * w/ SSD, according to IEC60068-2-27
- Vibration: Operating, 5 Grms, 5-500 Hz, 3 Axes
  * w/ SSD, according to IEC60068-2-64
- MTBF: 396,565 Hours

Front I/O

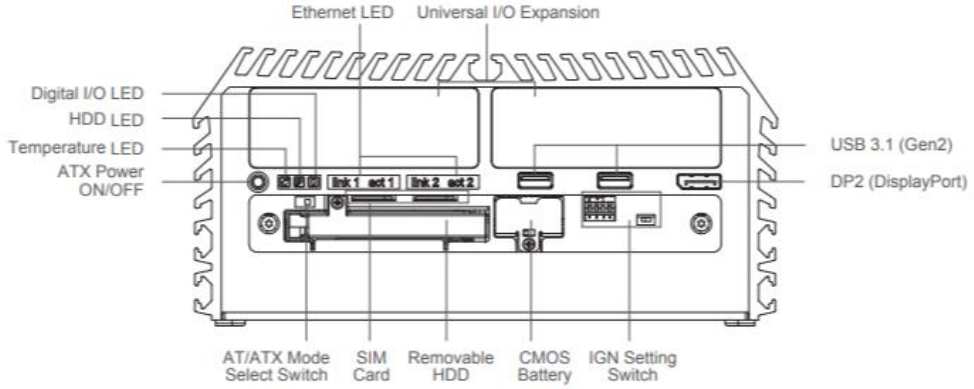

Rear I/O

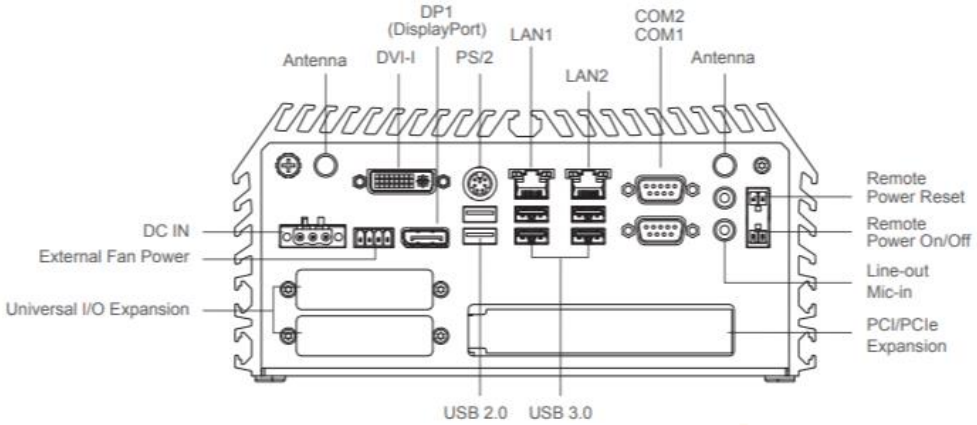

www.orionpc.com.br
55 11 4195-0992

PCs Industriais para Aplicações Embarcadas

Intel® Core™ i3 / i5 / i7 Fanless

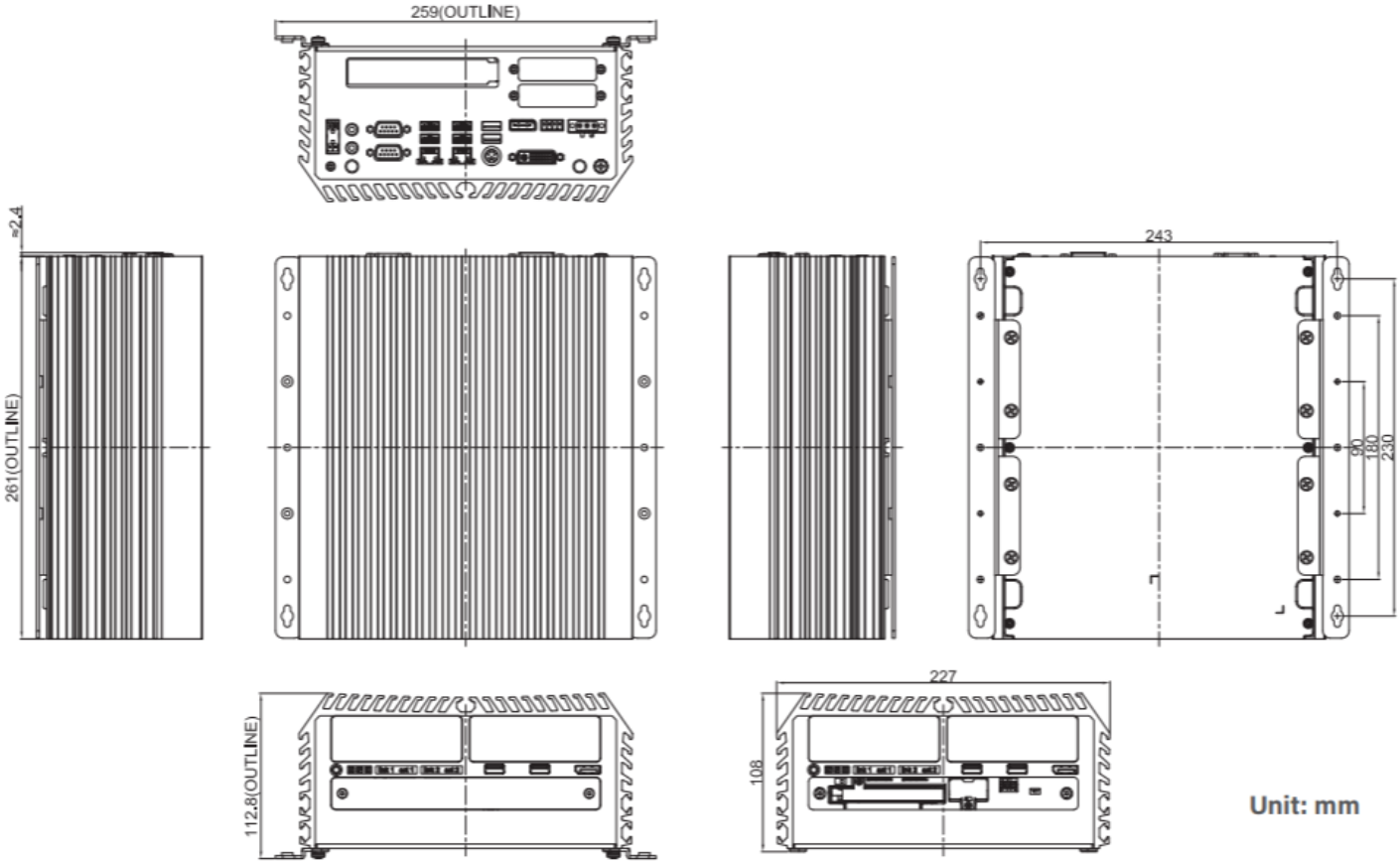

Unit: mm

www.orionpc.com.br
55 11 4195-0992

PCs Industriais para Aplicações Embarcadas

Intel® Core™ i3 / i5 / i7 Fanless

Especificações da versão OBA-DS1202CZ

Processor
- 9th Generation Intel® Coffee Lake-R S Series CPU:
  - Intel® Core™ i7-9700E 8 Cores Up to 4.4 GHz, TDP 65W
  - Intel® Core™ i5-9500E 6 Cores Up to 4.2 GHz, TDP 65W
  - Intel® Core™ i3-9100E 4 Cores Up to 3.7 GHz, TDP 65W
  - Intel® Core™ i7-9700TE 8 Cores Up to 3.8 GHz, TDP 35W
  - Intel® Core™ i5-9500TE 6 Cores Up to 3.6 GHz, TDP 35W
  - Intel® Core™ i3-9100TE 4 Cores Up to 3.2 GHz, TDP 35W
- 8th Generation Intel® Coffee Lake S Series CPU:
  - Intel® Core™ i7-8700 6 Cores Up to 4.6 GHz - 12M Cache, TDP 65W
  - Intel® Core™ i5-8500 6 Cores Up to 4.1 GHz - 9M Cache, TDP 65W
  - Intel® Core™ i3-8100 4 Cores 3.6 GHz - 6M Cache, TDP 65W
  - Intel® Core™ i7-8700T 6 Cores Up to 4.0 GHz - 12M Cache, TDP 35W
  - Intel® Core™ i5-8500T 6 Cores Up to 3.5 GHz - 9M Cache, TDP 35W
  - Intel® Core™ i3-8100T 4 Cores 3.1 GHz - 6M Cache, TDP 35W
  - Intel® Pentium® G5400 2 Cores 3.7 GHz - 4M Cache, TDP 58W
  - Intel® Pentium® G5400T 2 Cores 3.1 GHz - 4M Cache, TDP 35W
  - Intel® Celeron® G4900 2 Cores 3.1 GHz - 2M Cache, TDP 54W
  - Intel® Celeron® G4900T 2 Cores 2.9 GHz - 2M Cache, TDP 35W

BIOS
- AMI 32MB SPI BIOS

Chipset
- Intel® Q370

Memory
- 2x DDR4-2400/2666 MHz SO-DIMM Sockets, Supports up to 64 GB (Un-buffered and Non-ECC Type)

Graphics
- Integrated Intel® UHD Graphics 630: Core™ i7/i5/i3
- Integrated Intel® UHD Graphics 610: Pentium® /Celeron®
- Supports Triple Independent Display (1x DVI-I, 2x DisplayPort)

Audio
- Realtek® ALC888
- High Definition Audio

Expansion
- 3x Full-size Mini-PCIe Socket
- 2x SIM Socket
- 1x CFM (Control Function Module) Interface
- 2x CMI (Combined Multiple I/O) High Speed Interface
- 2x CMI (Combined Multiple I/O) Low Speed Interface
- 2x Antenna Hole
- 2x PCI/PCIe Expansion slot (with Optional Riser Card)
  * Supports maximum dimensions of add-on card (H x L):111.15 x 235 mm

Other Functions
- Supports Instant Reboot Technology (0.2 sec)
- SuperCap Integrated for CMOS Battery Maintenance-free Operation
- Watchdog Timer: Software Programmable Supports 256 Levels System Reset

Power Requirement
- Supports AT/ATX Power Type
- Power Input Voltage 9~48VDC
- 1x 3-Pin Terminal Block
- Power Adapter AC/DC 24V/5A 120W or 24V/9.2A 220W (Optional)

Physical
- Dimensions (WxDxH): 227 x 261 x 128 mm
- Weight: 5.14 kg
- Construction: Extruded Aluminum with Heavy Duty Metal
- Mounting: Wall Mount
- Unibody Chassis
- Fanless Design
- Jumper-less Design

Protection
- Reverse Power Input Protection
- Over Voltage Protection: Protection Range: 51~58V
  Protection Type: shut down operating voltage, re-power on at the preset level to recover
- Over Current Protection: 15A
- ESD Protection: +/-8kV (air), +/-4kV (contact)
- Surge Protection: 3.84 kV (impedance 12 ohm 1.2/50us waveform)

Storage
- 2x 2.5" SATA HDD/SSD bay (Gen3), 1x Internal, 1x Front Accessable Supports RAID 0/1
- 3x mSATA (shared by Mini-PCIe socket) (Gen3), BIOS Selectable
- 1x M.2 Key M 2280 Socket, Supports PCIe x4 NVMe SSD or SATA SSD (Gen3)

Certification
- EMC: CE, FCC Class A
- Safety: LVD, EN60950-1
- Railway: EN50155, EN50121-3-2

PCs Industriais para Aplicações Embarcadas

Intel® Core™ i3 / i5 / i7 Fanless

External I/O Interface

- 1x DVI-I (DVI-D: 1920 x 1200 @60Hz / VGA: 1920 x 1080 @60Hz)
- 2x DisplayPort (DisplayPort: 4096 x 2304 @60Hz)
- 2x GbE LAN (Supports WoL, Teaming, Jumbo Frame & PXE), RJ45
  - GbE1: Intel® I210-IT
  - GbE2: Intel® I219-LM
- 2x USB 3.1 Gen2 (Type A)
- 4x USB 3.0 (Type A)
- 2x USB 2.0 (Type A)
- 2x RS-232/422/485 with Auto Flow Control (Supports 5V/12V), DB9
- 1x PS/2, 6-pin mini-DIN Female Connector
- 1x Line-out & 1x Mic-in, Phone Jack 3.5mm
- 1x ATX Power On/Off Button
- 1x AT/ATX Mode Switch
- 1x Clear CMOS Switch
- 1x Remote Reset Connector, 2-pin Terminal Block
- 1x Remote Power On/Off Connector, 2-pin Terminal Block
- 1x External Fan Connector, 4-Pin Terminal Block (Supports smart fan function)

Operating System

- Windows® 10
- Linux: Supports by project

Environment

- Operating Temperature:
  35W TDP Processor: -40°C to 70°C
  51~65W TDP Processor: -40°C to 45°C
  * PassMark BurnInTest: 100% CPU, 2D/3D Graphics (without thermal throttling)
  * With extended temperature peripherals; Ambient with air flow
  * According to IEC60068-2-1, IEC60068-2-2, IEC60068-2-14
- Storage Temperature: -40°C to 85°C
- Relative Humidity: 95%RH @ 70°C (non-Condensing)
- Shock: Operating, 50 Grms, Half-sine 11 ms Duration
  * w/ SSD, according to IEC60068-2-27
- Vibration: Operating, 5 Grms, 5-500 Hz, 3 Axes
  * w/ SSD, according to IEC60068-2-64
- MTBF: 396,565 Hours

Front I/O

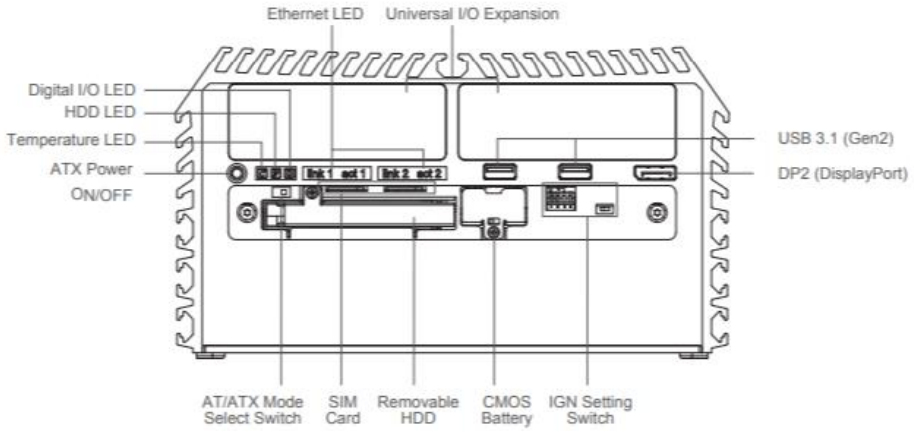

Rear I/O

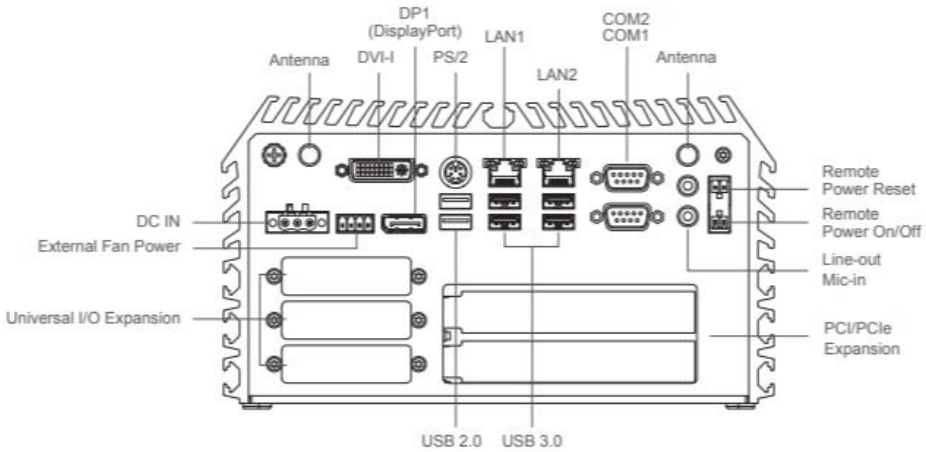

www.orionpc.com.br
55 11 4195-0992

PCs Industriais para Aplicações Embarcadas

Intel® Core™ i3 / i5 / i7 Fanless

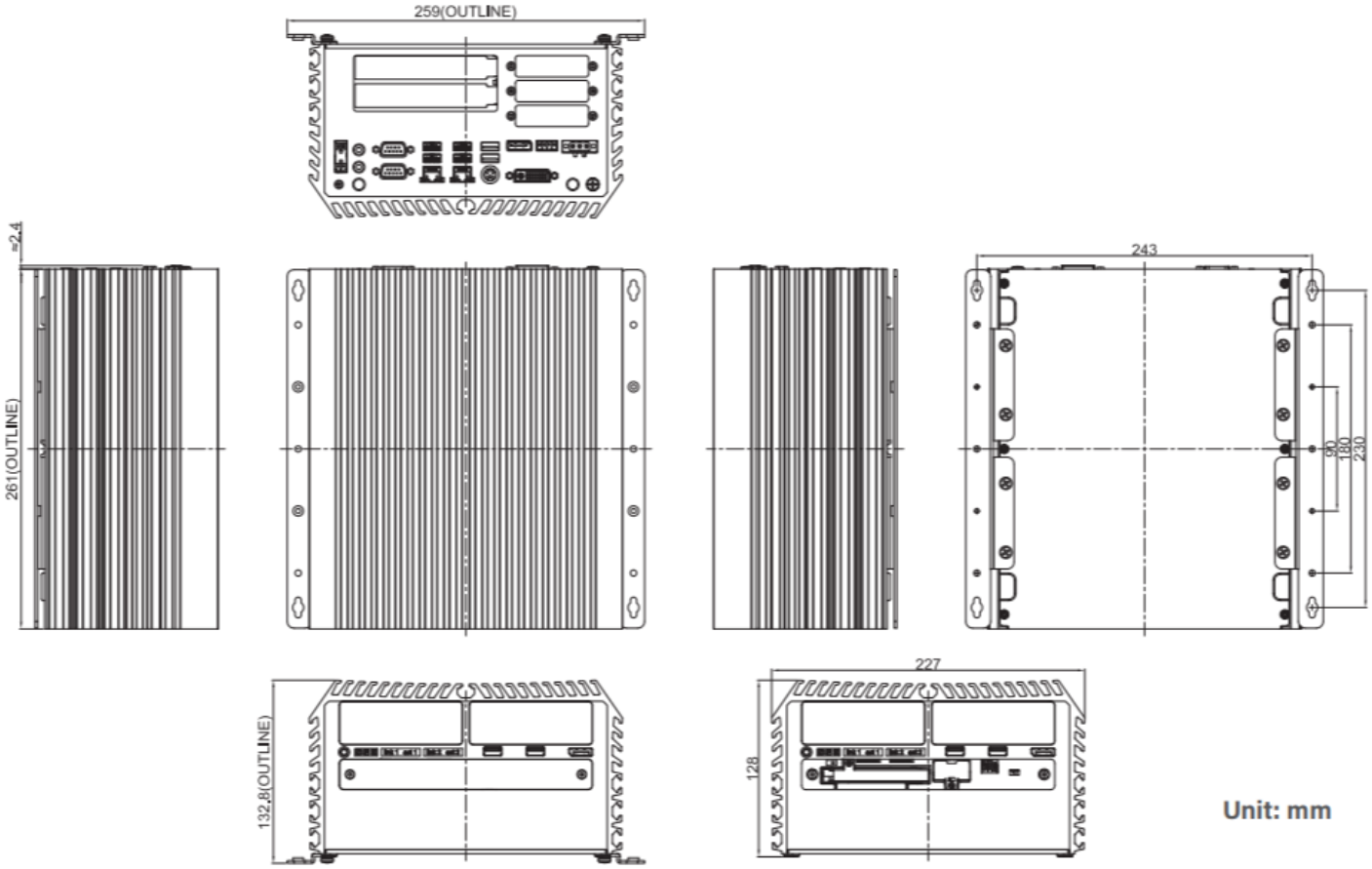

www.orionpc.com.br
55 11 4195-0992

Módulos de expansão disponíveis

Model No.	Description
CFM-PoE03	CFM Module with PoE Function, Individual Port 25.5W for DS-1200 Series
CFM-IGN101	CFM Module with Power Ignition Sensing Function, 12V/24V Selectable for DS-1200/ DS-1100/ P1101 Series
CMI-LAN01-R12/UB1012	CMI Module with 4x Intel I210-AT GbE LAN, RJ45 Port / 1x Universal Bracket with 4x RJ45 Cutout for DS-1200 Series
CMI-M12LAN01-R12/UB1010	CMI Module with M12 Connector, 4x Intel GbE LAN / 1x Universal Bracket with 4x M12 Cutout for DS-1200 Series
CMI-DIO02/UB1018	CMI Module with 16DIO (8in 8out) / 1x Universal Bracket with DIO Cutout for DS-1200 Series
CMI-COM02/UB1004	CMI Module with 4x RS232/422/485 Ports (Support 5V/12V) / 1x Universal Bracket with 4x DB9 Cutout for DS-1200 Series
CMI-ICOM01/UB1004	CMI Module with 4x Isolated RS232/422/485 Ports (Support 5V/12V) / 1x Universal Bracket with 4x DB9 Cutout for DS-1200 Series
MEC-COM-M212-DB9/UB0303	Mini-PCIe Module with 2x RS-232 Ports, 1x Standard DB9 Cable / 2x Universal Bracket each with 1x DB9 Cutout for DS / P1000 Series
MEC-USB-M102-15/UB0314	Mini-PCIe Module with 2x USB 3.0 Ports, 1x 15cm cable / 1xUniversal Bracket with 2x USB Cutout for DS Series
MEC-LAN-M002-30/UB0311	Mini-PCIe Module with 2x LAN Ports, 2x 30cm cable / 1x Universal Bracket with 2x RJ45 Cutout for DS Series
FAN-EX101	External Fan with 4pin Terminal Block Plug, Mounting Bracket, Support smart fan
FAN-UB100	Exhaling fan with 4pin Connector, Universal Bracket
FAN-UB101	Inhaling fan with 4pin Connector, Universal Bracket
PAH01	Power Adapter Holder for GST120A24
PAH02	Power Adapter Holder for GST220A24
GST120A24-CIN	Adapter AC/DC 24V 5A 120W, with 3pin Terminal Block Plug 5.0mm Pitch, with TUBES, level VI
GST220A24-CIN	Adapter AC/DC 24V 9.2A 220W with 3pin Terminal Block Plug 5.0mm Pitch, with TUBES, level VI
RC-E8E8-01	Riser Card with 2x PCIex8 Slots
RC-E16E1-01	Riser Card with 1x PCIex16 and 1x PCIex1 Slots
RC-E16PI-01	Riser Card with 1x PCIex16 and 1x PCI Slots
RC-PIPI-01	Riser Card with 2x PCI Slots